Stormwater Pollution Prevention Plan (SWPPP) Short Form For Small and Medium Construction Projects

Introduction

A **Stormwater Pollution Prevention Plan (SWPPP)** is a document that explains the potential for stormwater pollution caused by construction activities and the methods required to control those problems. With properly planned, installed and maintained Best Management Practices (BMPs), stormwater impacts such as heavy stormwater flows, soil erosion, and degradation of water quality can be minimized. **All projects of any size must manage the stormwater runoff from construction sites, demolition, clearing and grading projects, or other activity that exposes soils.**

This guide page describes the main parts of a SWPPP for Small and Medium Impact projects, which include:

- The SWPPP Short Form (this form), and
- The applicable BMP details (located at the end of this form), and
- An Erosion and Sediment Control (ESC) plan.

The purpose of the SWPPP is to outline the actions that will be implemented on construction sites to reduce or eliminate discharge of sediment and other pollutants into receiving waters. Completing this checklist will ensure a well-prepared plan that meets City of Shoreline standards. Managing construction stormwater runoff and pollution on project sites is required by the Western Washington Phase II Municipal Stormwater Permit issued to the City of Shoreline by the Washington State Department of Ecology.

Eligibility and Requirements

The SWPPP Short Form is required for all Small and Medium Impact Projects. This includes any project that:

- Disturbs up to 7,000 square feet of land, or
- Creates less than 5,000 square feet of hard surface, or
- Grades/fills less than 500 cubic yards.

Any project that exceeds any of these thresholds is required to prepare a formal Department of Ecology SWPPP template.

The requirements to complete the SWPPP Short Form are:

1. Complete all sections of the SWPPP Short Form narrative in **Section 1: Background Information**.
2. Select all appropriate construction stormwater and erosion control BMPs in **Section 2: Required Elements Checklist**. Attach a copy of the BMP specifications for each selected BMP.
3. Provide an Erosion and Sediment Control (ESC) Plan. The ESC plan should include the information in **Section 3: ESC (Erosion and Sediment Control) Plan**.
4. Complete the **Construction Contact Sheet** and attach it, along with the **Site Inspection Form**, to the Short Form SWPPP.

Site Inspections

Projects that disturb one or more acres must have site inspections conducted by a Certified Erosion and Sediment Control Lead (CESCL). Project sites less than one-acre (not part of a larger common plan of development or sale) may have a person without Certified Erosion and Sediment Control Lead (CESCL) certification conduct the site inspections.

The CESCL or inspector must have the skills to assess the:

- Site conditions and construction activities that could impact the quality of stormwater.
- Effectiveness of erosion and sediment control measures used to control the quality of stormwater discharges.

The CESCL or inspector must inspect all areas disturbed by construction activities, all BMPs, and all stormwater discharges at least **once** every calendar week and **within 24 hours** of any discharge from the site. The CESCL or inspector must examine stormwater visually for the presence of suspended sediment, turbidity, discoloration, and oil sheen. The CESCL or inspector must complete the Site Inspection Form and attach all completed SWPPP Site Inspection Forms to the SWPPP for reporting and recordkeeping.

Stormwater Pollution Prevention Plan (SWPPP) Short Form For Small and Medium Construction Projects

Section 1: Background Information

Project Title: _____

Site Address: _____

Parcel Number(s): _____

Property Owner: _____

Contact Person (If different than the property owner): _____

Address of Contact Person: _____

Phone Number: _____

1. Give an accurate, brief description of the proposed project's scope and nature:

2. Area of site (square feet or acres): _____
3. Area of land disturbance (square feet or acres): _____
4. Area of existing impervious surfaces (square feet or acres): _____
5. Area of new hard surfaces (including impervious surfaces, permeable pavement, and gravel in square feet or acres): _____
6. Area of existing native vegetation to be converted to landscaping or pasture (square feet or acres): _____
7. Proposed quantity of excavation (cubic yards): _____
8. Proposed quantity of fill (cubic yards): _____
9. Will there be construction stormwater discharges to adjoining properties or waters of the state? _____
10. Describe critical areas that are on or adjacent to the site:

11. Describe potential erosion problems on-site:

Section 2: Required Elements Checklist

Part 1: 13 Elements
Indicate the BMPs used for each element. If site conditions render an element unnecessary, check "other" and briefly describe why it is not needed.

1. **Mark Clearing Limits** – Prior to beginning land disturbing activities, all projects must visibly mark clearing limits, critical areas and their buffers, and any trees to be preserved. Clearly mark limits both in the field and on the plans. Do not staple or wire fences to trees.

   Applicable BMPs include:

   ☐Preserve existing vegetation – BMP C101
   ☐High Visibility Plastic or Metal Fence – BMP C103
   ☐Tree Protection During Construction – BMP T101
   ☐Other:

2. **Establish Construction Access** – All construction projects subject to vehicular traffic shall provide a means of preventing vehicle tracking of soil from the site onto City streets. At a minimum, access to the site shall be stabilized with a quarry spall pad, or other equivalent BMP, to minimize tracking sediment into the roadway. If the existing paved access to the site is used as the construction access, it must be clearly labeled on the plans.

   If sediment is tracked off-site, sweep or shovel the affected roadway thoroughly. Street washing is not permitted. After sediment is recovered, transport it to a controlled sediment disposal area.

   Applicable BMPs include:

   ☐ Stabilized Construction Entrance – BMP C105
   ☐ Wheel Wash – BMP C106
   ☐ Construction Road/Parking Area Stabilization – BMP C107
   ☐ Other:

3. **Control Flow Rates** – Flow control BMPs must be used to protect properties and waterways downstream of construction sites from erosion and discharge of turbid waters. A combination of drainage swales and possibly a sediment trap may be used to control runoff and trap associated sediment before it leaves the construction site.

   Applicable BMPs include:

   ☐ Interceptor Dike and Swale – BMP C200
   ☐ Straw Wattles – BMP C235
   ☐ Sediment Trap – BMP C240
   ☐ Other:

4. **Install Sediment Controls** – Sediment barriers should be used downslope of disturbed areas. Sediment barriers are intended to create a barrier to slow the sheet flow of stormwater and allow the sediment to settle out behind the barrier. Do not used sediment

barriers in streams, channels, ditches, or around inlets/outlets of culverts. Sediment barriers shall be clearly identified on the plan.

Design, install, and maintain effective erosion and sediment control BMPs to minimize the discharge of pollutants from the site. BMPs must address factors such as the amount, frequency, intensity, and duration of precipitation.

Applicable BMPs include:

☐ Silt Fence – BMP C233
☐ Vegetated Strip – BMP C234
☐ Straw Wattles – BMP C235
☐ Other:

5. **Stabilize Soils** – Protect exposed and unworked soils to reduce erosion from rainfall and wind. Between **October 1 and April 30**, no soil shall remain uncovered for more than 2 days. From **May 1 to September 30**, no soil shall remain exposed for more than 7 days.

   Mulch can be applied to any site where soil has been disturbed and the protective vegetation has been removed. Erosion control blankets may be suitable for post-construction site stabilization or for temporary stabilization of highly erosive soils, such as on steep slopes and areas where vegetation is slow to establish.

   Applicable BMPs include:

   ☐ Temporary and Permanent Seeding – BMP C120
   ☐ Mulching – BMP C121
   ☐ Nets and Blankets – BMP C122
   ☐ Plastic Covering – BMP C123
   ☐ Sodding – BMP C124
   ☐ Topsoiling – BMP C125
   ☐ Other:

6. **Protect Slopes** – Design, construct, and phase projects in a manner to minimize erosion. Protect slopes by diverting water at the top of slopes. Reduce runoff velocity by minimizing the length of the slope. This can be done by terracing and roughening slope sides. Seeding and establishing vegetation can also help protect slopes.

   Applicable BMPs include:

   ☐ Temporary and Permanent Seeding – BMP C120
   ☐ Nets and Blankets – BMP C122
   ☐ Plastic Covering – BMP C123
   ☐ Interceptor Dike and Swale – BMP C200
   ☐ Other:

7. **Protect Drain Inlets** – Prevent sediment from entering the drainage system both on-site and downstream by installing inlet protection devices. Inlet protection shall be installed on all drains within 500' of the project site, including those that become operable during construction. Maintain 2/3 of the available storage in inlet protection devices at all times. Inlet protection shall be removed after final stabilization of the site.

   Applicable BMPs include:

   ☐ Storm Drain Inlet Protection – BMP C220
   ☐ Other:

8. **Stabilize Channels and Outlets** – Design, construct, and stabilize all on-site drainage channels to prevent erosion from a 10-year 24-hour frequency storm for the developed conditions. Provide stabilization, including armoring material, adequate to prevent erosion of outlets, adjacent stream banks, slopes and downstream reaches at the outlets of all conveyance systems.

   The best method of stabilizing channels is to line the channel completely with a blanket product and then add check dams as necessary to function as an anchor and slow the flow of water.

   Applicable BMPs include:

   ☐ Channel Lining – BMP C202
   ☐ Outlet Protection – BMP C209
   ☐ Other:

9. **Control Pollutants** – Handle and dispose of all pollutants, including waste materials and demolition debris that occur on-site in a manner that does not contaminate surface water. Do not maintain heavy equipment or vehicles on-site. Clean any spills immediately. Handle concrete waste appropriately.

   Applicable BMPs include:

   ☐ Concrete Handling – BMP C151
   ☐ Sawcutting and Surfacing Pollution Prevention – BMP C152
   ☐ Material Delivery, Storage and Containment – BMP C153
   ☐ Other:

10. **Control Dewatering** – All dewatering from excavation, trenching, etc. shall be discharged into a controlled conveyance system prior to discharge to a sediment trap or sediment pond. At a minimum, geotextile fabric socks/bags/cells will be used to filter sediment and reduce turbidity. All discharge to sanitary sewer requires King County and Ronald Wastewater approval.

    Applicable BMPs include:

    ☐ Level Spreader – BMP C206
    ☐ Infiltration (Provide details)

☐ Discharge to sanitary sewer (King County and Ronald Wastewater approval is required)
☐ Other:

11. **Maintain BMPs** – All BMPs shall be maintained and repaired as needed to ensure continued function and performance. Visual monitoring shall occur at least **once** per calendar week and **within 24 hours** of any discharge from the site. All BMPs shall be removed within 30 days of final stabilization of the site or until the BMPs are no longer necessary.

    Applicable BMPs include:

    ☐ Maintain and repair in accordance with BMP specifications. Refer to Chapter 4 of Volume II of the 2014 Department of Ecology Stormwater Manual for Western Washington.
    ☐ Other:

12. **Manage the Project** – Projects shall be phased to the maximum degree practicable and take into account seasonal work limits.

    Projects that disturb one or more acres must have site inspections conducted by a Certified Erosion and Sediment Control Lead (CESCL). Project sites less than one-acre (not part of a larger common plan of development or sale) may have an inspector without Certified Erosion and Sediment Control Lead (CESCL) certification conduct the site inspections. The SWPPP must identify the CESCL/inspector who shall be present on-site or on-call at all times.

    ☐ Phase construction activities to account for seasonal work limitations.
    ☐ Maintain SWPPP documentation on-site at all times.
    ☐ Update SWPPP documentation as necessary.
    ☐ Attach the Construction Emergency Contact Sheets to the SWPPP.
    ☐ Inspect and monitor all BMPs.
    ☐ Attach all completed SWPPP Site Inspection Forms to the SWPPP for reporting and recordkeeping.

13. **Protect Low Impact Development (LID) BMPs** – All LID BMPs, including infiltration facilities, bioretention, rain gardens, and permeable pavement facilities, shall be clearly marked and protected from compaction during construction. Any facilities that have accumulated sediment during construction must be restored to their fully functioning condition. Sediment-laden runoff is not permitted onto permeable pavement.

    Applicable BMPs include:

    ☐ Buffer Zones – BMP C102
    ☐ High Visibility Fence – BMP C103
    ☐ Silt Fence – BMP C233
    ☐ Vegetated Strip – BMP C234
    ☐ Other:

Part 2: BMP Details

For each BMP selected in the checklist, attach a copy of the BMP detail to the SWPPP Short Form. The details referenced in the checklist are provided at the end of this document for reference. Additional BMP details and specifications can be found in Chapter 4 of Volume II of the 2014 Department of Ecology Stormwater Manual for Western Washington.

Section 3: ESC (Erosion and Sediment Control) Plan

Attach a site plan (minimum 11” x 17”) that includes the following:

1. Legal description of the property.
2. North Arrow
3. Property boundaries
4. Boundaries of existing vegetation (tree lines, pasture areas, etc.)
5. Identify and label areas of potential erosion problems.
6. Identify any on-site or adjacent surface waters or critical areas and associated buffers.
7. Identify FEMA base flood boundaries and Shoreline Management boundaries (if applicable).
8. Show existing and proposed contours.
9. Delineate limits of clearing and grading.
10. Indicate BMPs.
11. Name and phone number of the person responsible for preparing and maintaining the SWPPP.

NOTE: The ESC Plan can be included on the project site plan, if the plan is legible.

Page intentionally left blank.

CONSTRUCTION EMERGENCY CONTACT SHEET

Date: _____

Project Name: _____

Project Address: _____

Type of Work: _____

Developer: _____

Office Phone: _____ 24-hour Phone: _____

Owner:_____

Office Phone: _____ 24-hour Phone: _____

General Contractor: _____

Office Phone: _____ 24-hour Phone: _____

Project Manager: _____

Office Phone: _____ 24-hour Phone: _____

Superintendent: _____

Office Phone: _____ 24-hour Phone: _____

Foreman: _____

Office Phone: _____ 24-hour Phone: _____

CESCL/Inspector: _____

Office Phone: _____ 24-hour Phone: _____

City of Shoreline Customer Response Team: 206-801-2700

CONSTRUCTION EMERGENCY CONTACT SHEET

INJURY or FIRE– Call 911

Provide project location or address (If no address, describe the location of the construction access so that it can be relayed to emergency responders)

SPILL

(Any hazardous materials including diesel fuel, gasoline, hydraulic fluid that enters the storm drain system or receiving waters)

OR

WATER QUALITY IMPACTS

(Site stormwater runoff turbidity exceeds 250 ntu)

- Call City of Shoreline Customer Response Team: 206-801-2700
- Call Washington State Department of Ecology within 24 hrs: 425-649-7000

FISH KILL OR DISTRESS

- Call City of Shoreline Customer Response Team: 206-801-2700
- Call Washington Department of Fish and Wildlife Area Habitat Biologist: 425-313-5683

ARCHAEOLOGICAL FINDS

- Call City of Shoreline Customer Response Team: 206-801-2700
- Call Army Corps of Engineers, Seattle office: 206-764-3634

SWPPP
SITE INSPECTION FORM

Project: _____ Permit No.:_____

CESCL/Inspector: _____ Date: _____ Time: _____

Inspection Type: ☐ After a rain event ☐ Weekly ☐ Turbidity benchmark exceedance

☐ Other – explain: _____

Weather: _____

Precipitation: Since last inspection: _____inches In last 24 hours: _____ inches

Description of General Site Conditions: _____

_____

_____

Will existing BMPs need to be modified or removed, or other BMPs installed? ☐ **YES** ☐ **NO**

If YES, list the action items to be completed on the following table:

Actions to be Completed	Date Completed/ Initials
1.	
2.	
3.	
4.	
5.	

Was water quality sampling (turbidity and pH) part of this inspection? ☐ **YES** ☐ **NO**

- If yes, attach Turbidity & pH Monitoring Data Sheet.

Is the site in compliance with the SWPPP and the permit requirements? ☐ **YES** ☐ **NO**

- If no, indicate the tasks necessary to bring the site into compliance on the "Actions to be Completed" table above and include dates each job will be completed.
- If no, has the non-compliance been reported to the City of Shoreline? ☐ **YES** ☐ **NO**
- If no, should the SWPPP be modified? ☐ **YES** ☐ **NO**

I certify that this report is true, accurate, and complete, to the best of my knowledge and belief.

Name of Inspector (Print)_____ Title/Qualification _____

Signature_____ Date _____

SWPPP
SITE INSPECTION FORM

Project: _____ Permit No.:_____

CESCL/Inspector: _____ Date: _____ Time: _____

Site BMPs	Overall Condition	Need Repair?	Comments/Observations
Element 1: Clearing Limits			
• Preserve existing vegetation	P F	Y N	
• High Visibility Plastic or Metal Fence	P F	Y N	
• Tree Protection During Construction	P F	Y N	
• Other	P F	Y N	
Element 2: Construction Access			
• Stabilized Construction Entrance	P F	Y N	
• Wheel Wash	P F	Y N	
• Const. Road/Parking Area Stable	P F	Y N	
• Other	P F	Y N	
Element 3: Control Flow Rates			
• Interceptor Dike and Swale	P F	Y N	
• Straw Wattles	P F	Y N	
• Sediment Trap	P F	Y N	
• Other	P F	Y N	
Element 4: Sediment Controls			
• Silt Fence	P F	Y N	
• Vegetated Strip	P F	Y N	
• Straw wattles	P F	Y N	
• Other	P F	Y N	
Element 5: Stabilize Soils			
• Seeding	P F	Y N	
• Mulch	P F	Y N	
• Nets and Blankets	P F	Y N	
• Plastic Covering	P F	Y N	
• Sodding	P F	Y N	
• Topsoil	P F	Y N	
• Other	P F	Y N	
Element 6: Protect Slopes			
• Seeding	P F	Y N	
• Nets and Blankets	P F	Y N	
• Plastic Covering	P F	Y N	
• Interceptor Dike and Swale	P F	Y N	
• Other	P F	Y N	
Element 7: Protect Drain Inlets			
• Storm drain inlet protection	P F	Y N	
• Other	P F	Y N	
Element 8: Stabilize Channels & Outlets			
• Channel Lining	P F	Y N	
• Outlet Protection	P F	Y N	
• Other	P F	Y N	

P=Pass, F=Fail, Y=Yes, N=No

Site BMPs	Overall Condition	Need Repair?	Comments/Observation
Element 9: Control Pollutants			
• Concrete Handling	P F	Y N	
• Sawcutting and Surfacing Pollution Prevention	P F	Y N	
• Material Delivery, Storage and Containment	P F	Y N	
• Other	P F	Y N	
	P F	Y N	
Element 10: Control Dewatering			
• Level Spreader	P F	Y N	
• Infiltration	P F	Y N	
• Discharge to sanitary sewer	P F	Y N	
• Other	P F	Y N	
Element 11: Maintenance			
• Weekly BMP maintenance	P F	Y N	
• Other	P F	Y N	
Element 12: Manage the Project			
• Phase construction activities	P F	Y N	
• SWPPP on-site	P F	Y N	
• Update SWPPP	P F	Y N	
• Emergency contacts on SWPPP	P F	Y N	
• Inspect and monitor all BMPs	P F	Y N	
• Attach all completed SWPPP forms to the SWPPP for recordkeeping	P F	Y N	
Element 13: Protect Low Impact Development BMPs			
• Buffer Zones	P F	Y N	
• High Visibility Fence	P F	Y N	
• Silt Fence	P F	Y N	
• Vegetated Strip	P F	Y N	
• Other	P F	Y N	

P=Pass, F=Fail, Y=Yes, N=No

NOT TO SCALE

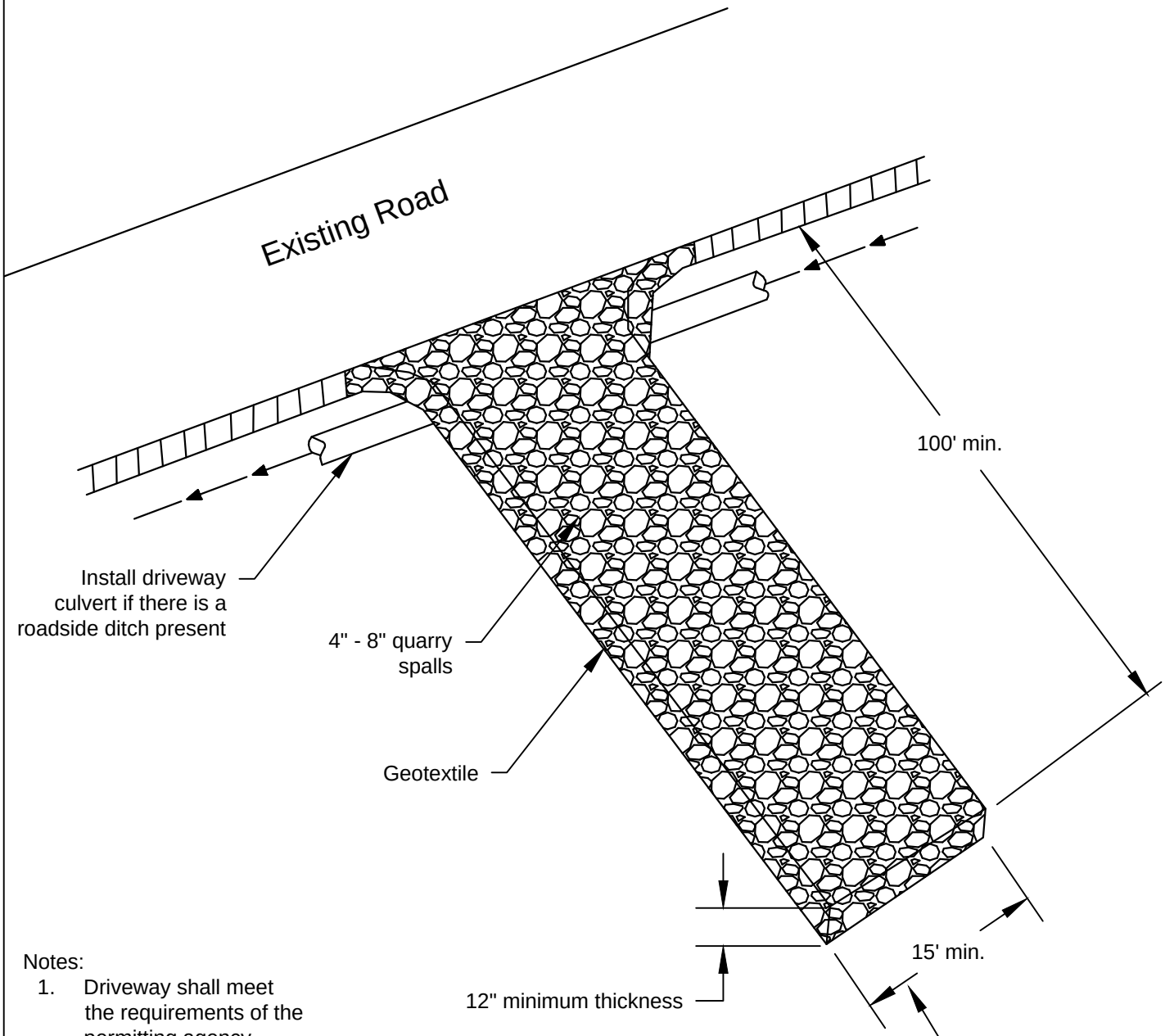

Notes:

1. Driveway shall meet the requirements of the permitting agency.
2. It is recommended that the entrance be crowned so that runoff drains off the pad.

DEPARTMENT OF ECOLOGY
State of Washington

BMP C105

Figure II-4.1.1
Stabilized Construction Entrance

Revised June 2015

Please see *http://www.ecy.wa.gov/copyright.html* for copyright notice including permissions, limitation of liability, and disclaimer.

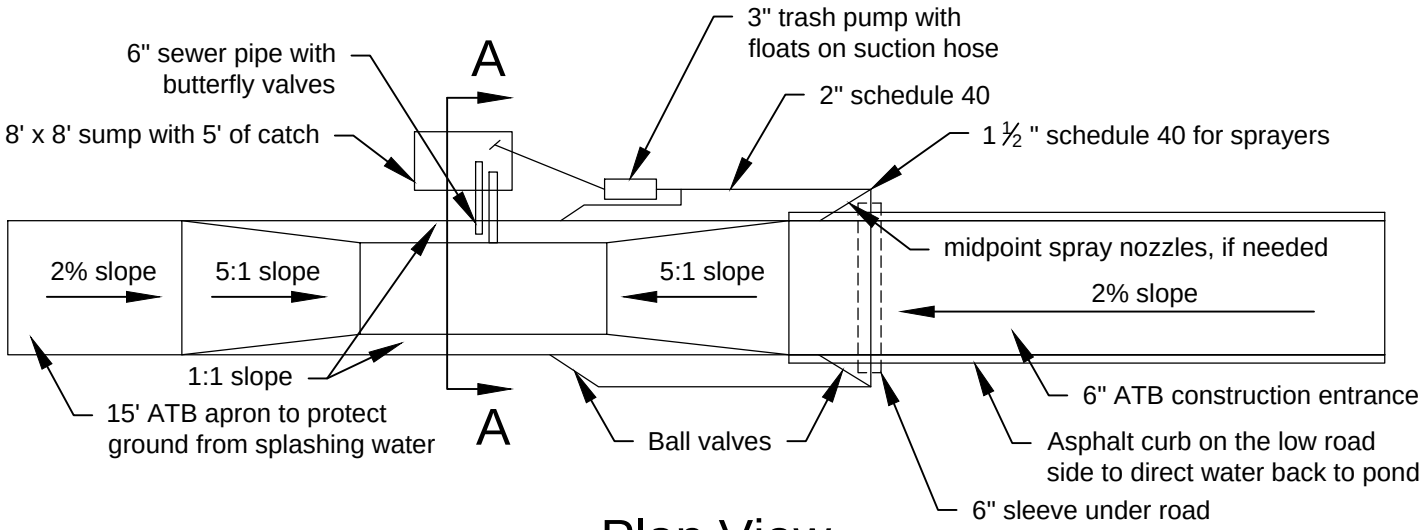

Plan View

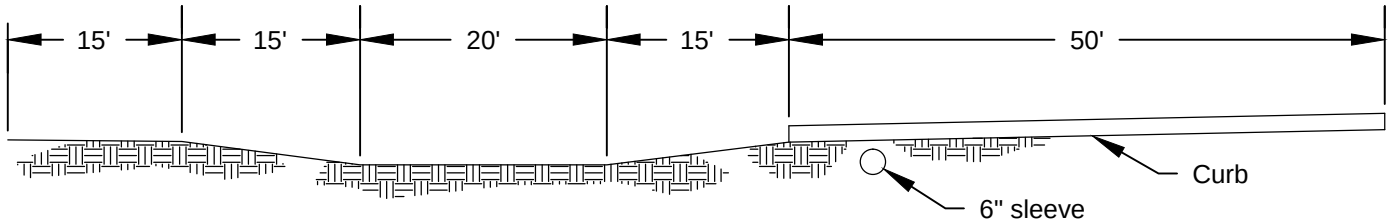

Elevation View

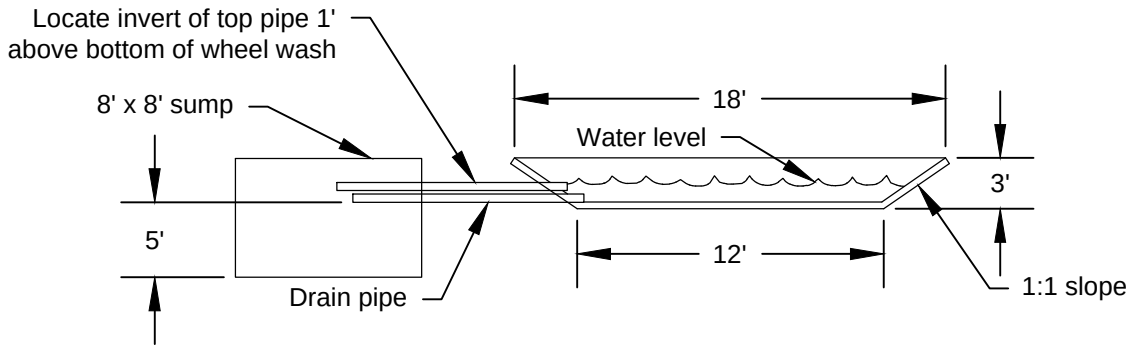

Section A-A

Notes:

1. Build 8' x 8' sump to accomodate cleaning by trackhoe.

NOT TO SCALE

DEPARTMENT OF
ECOLOGY
State of Washington

BMP C106

Figure II-4.1.2
Wheel Wash

Revised June 2015

Please see *http://www.ecy.wa.gov/copyright.html* for copyright notice including permissions, limitation of liability, and disclaimer.

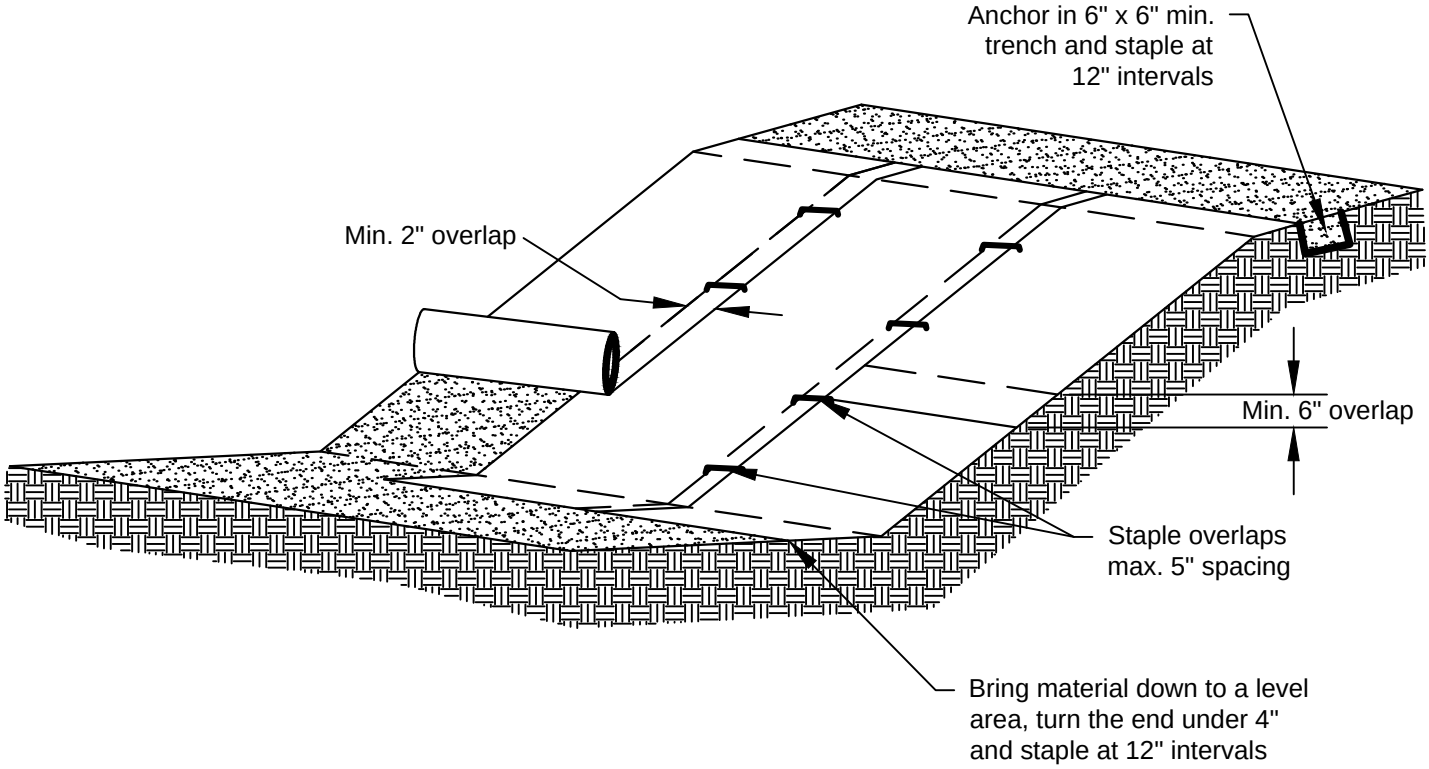

Notes:

1. Slope surface shall be smooth before placement for proper soil contact.
2. Stapling pattern as per manufacturer's recommendations.
3. Do not stretch blankets/mattings tight - allow the rolls to mold to any irregularities.
4. For slopes less than 3H:1V, rolls may be placed in horizontal strips.
5. If there is a berm at the top of the slope, anchor upslope of the berm.
6. Lime, fertilize, and seed before installation. Planting of shrubs, trees, etc. should occur after installation.

NOT TO SCALE

DEPARTMENT OF ECOLOGY
State of Washington

BMP C122

Figure II-4.1.4
Slope Installation

Revised June 2015

Please see *http://www.ecy.wa.gov/copyright.html* for copyright notice including permissions, limitation of liability, and disclaimer.

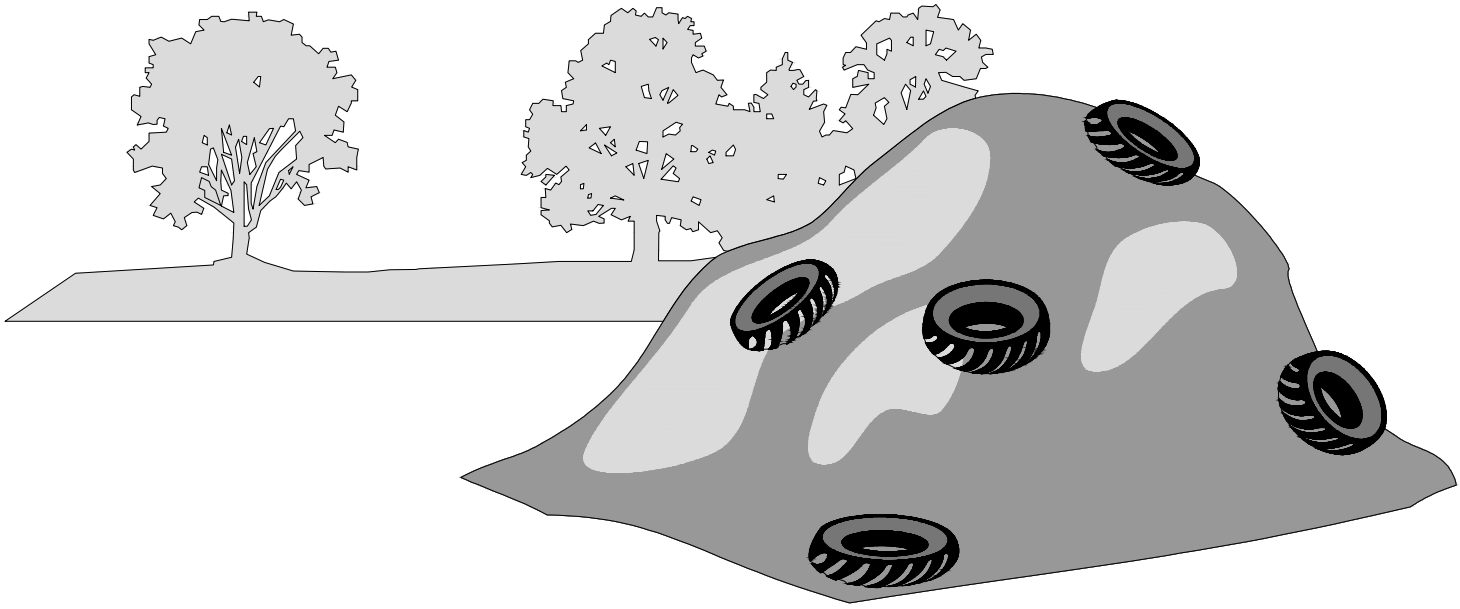

NOT TO SCALE

DEPARTMENT OF
ECOLOGY
State of Washington

BMP C123

Figure IV-2.2.14
Material Covered with Plastic Sheeting

Revised December 2015

Please see *http://www.ecy.wa.gov/copyright.html* for copyright notice including permissions, limitation of liability, and disclaimer.

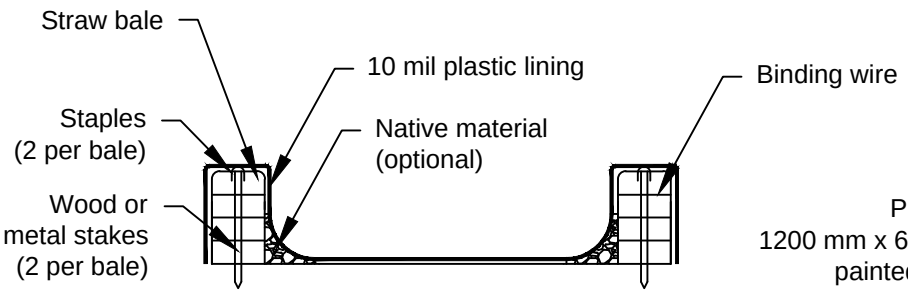

Section B-B

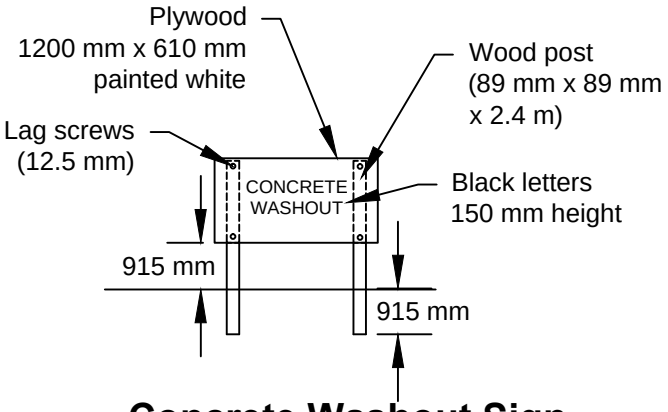

Concrete Washout Sign Detail (or equivalent)

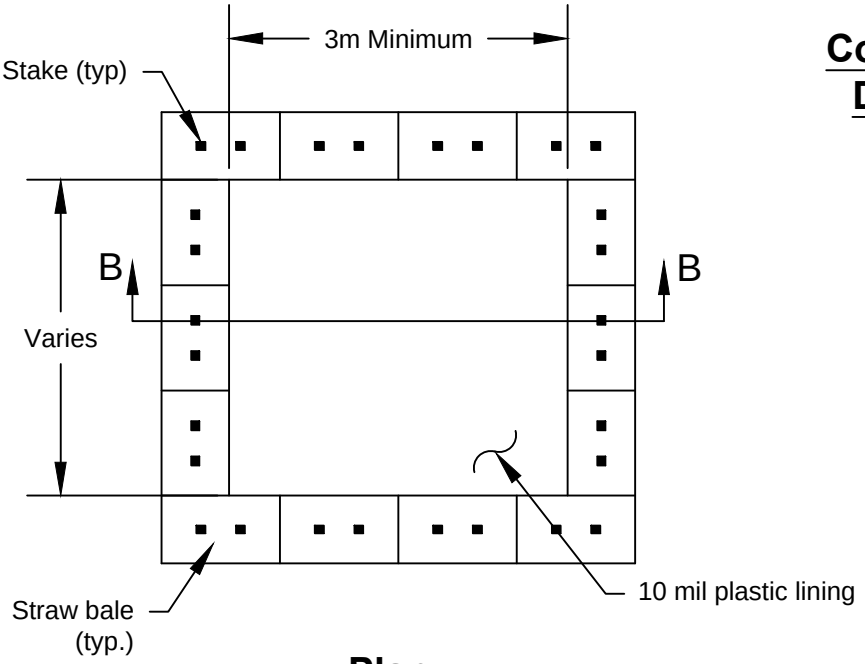

Plan

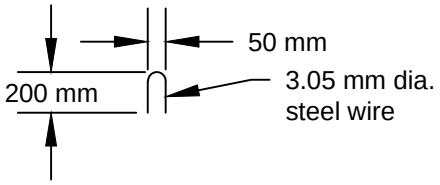

Staple Detail

Notes:

1. Actual layout determined in the field.
2. The concrete washout sign shall be installed within 10 m of the temporary concrete washout facility.

Type "Above Grade" with Straw Bales

NOT TO SCALE

DEPARTMENT OF ECOLOGY
State of Washington

BMP C151

Figure II-4.1.7b
Concrete Washout Area

Revised June 2015

Please see *http://www.ecy.wa.gov/copyright.html* for copyright notice including permissions, limitation of liability, and disclaimer.

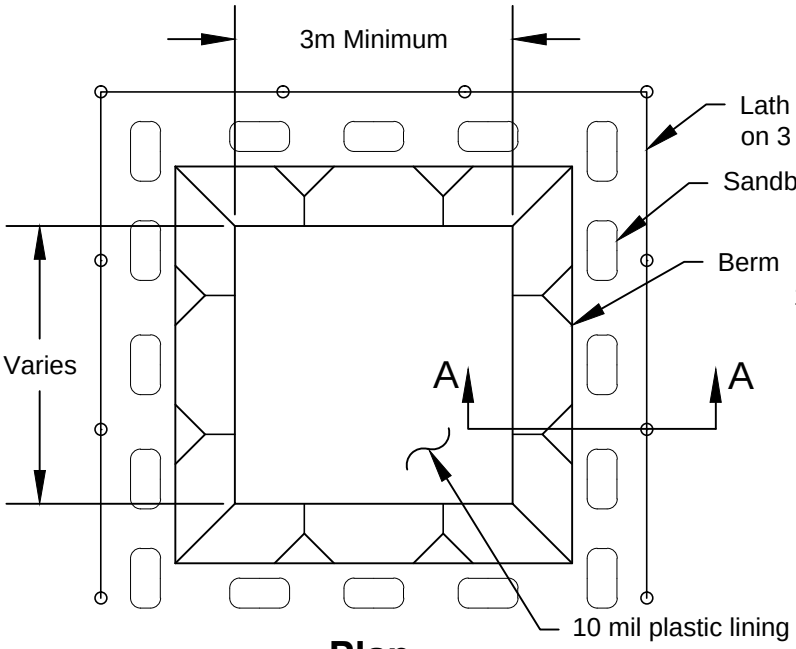

Plan

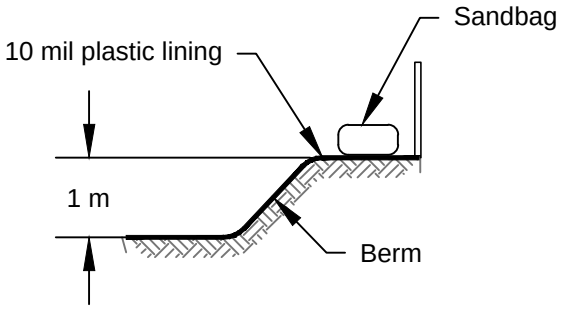

Section A-A

Type "Below Grade"

Notes:

1. Actual layout determined in the field.
2. A concrete washout sign shall be installed within 10 m of the temporary concrete washout facility.

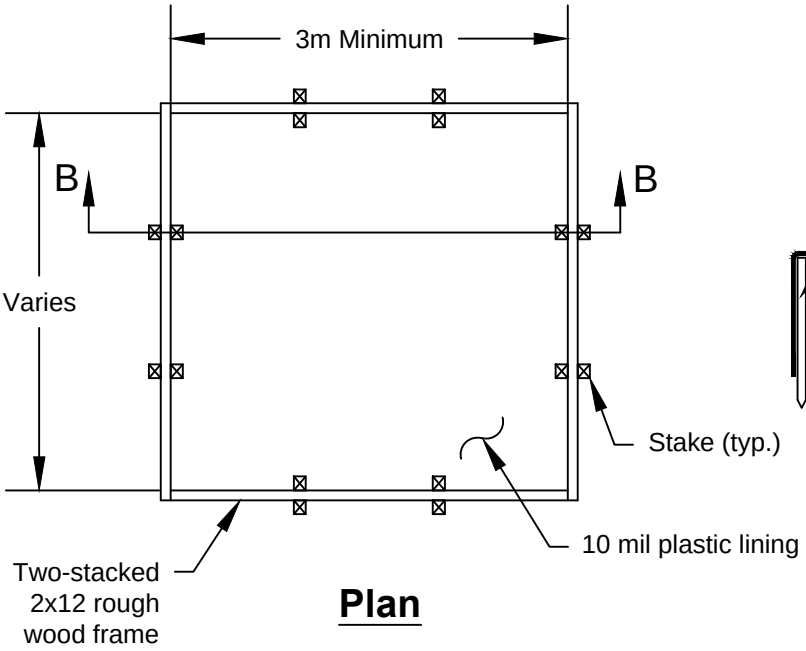

Plan

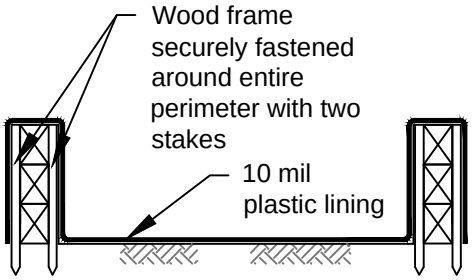

Section B-B

Type "Above Grade" with Wood Planks

NOT TO SCALE

DEPARTMENT OF ECOLOGY
State of Washington

BMP C151

Figure II-4.1.7a
Concrete Washout Area

Revised June 2015

Please see *http://www.ecy.wa.gov/copyright.html* for copyright notice including permissions, limitation of liability, and disclaimer.

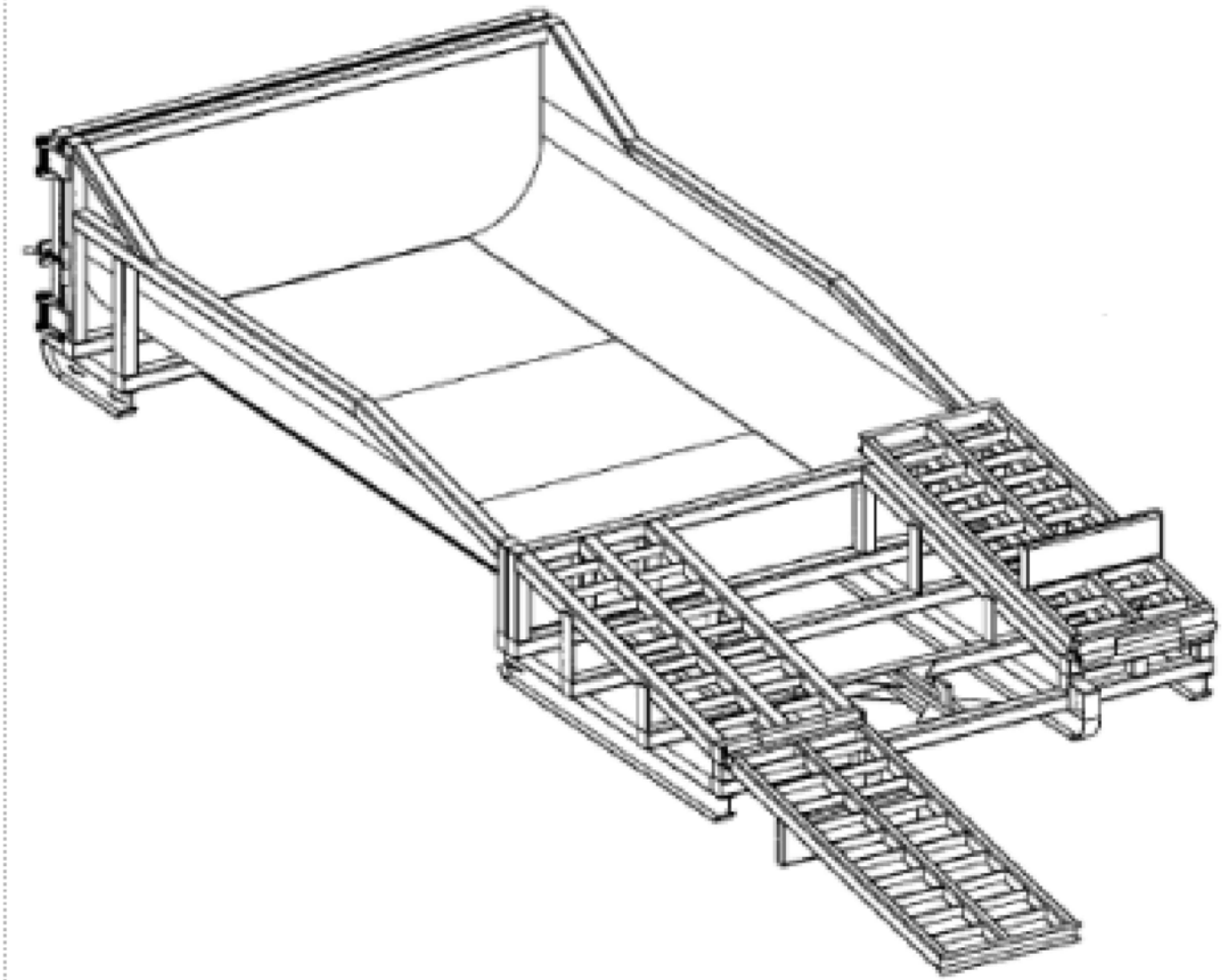

BMP C151

NOT TO SCALE

DEPARTMENT OF
ECOLOGY
State of Washington

Figure II-4.1.8
Prefabricated Concrete Washout Container w/Ramp

Revised June 2015

Please see *http://www.ecy.wa.gov/copyright.html* for copyright notice including permissions, limitation of liability, and disclaimer.

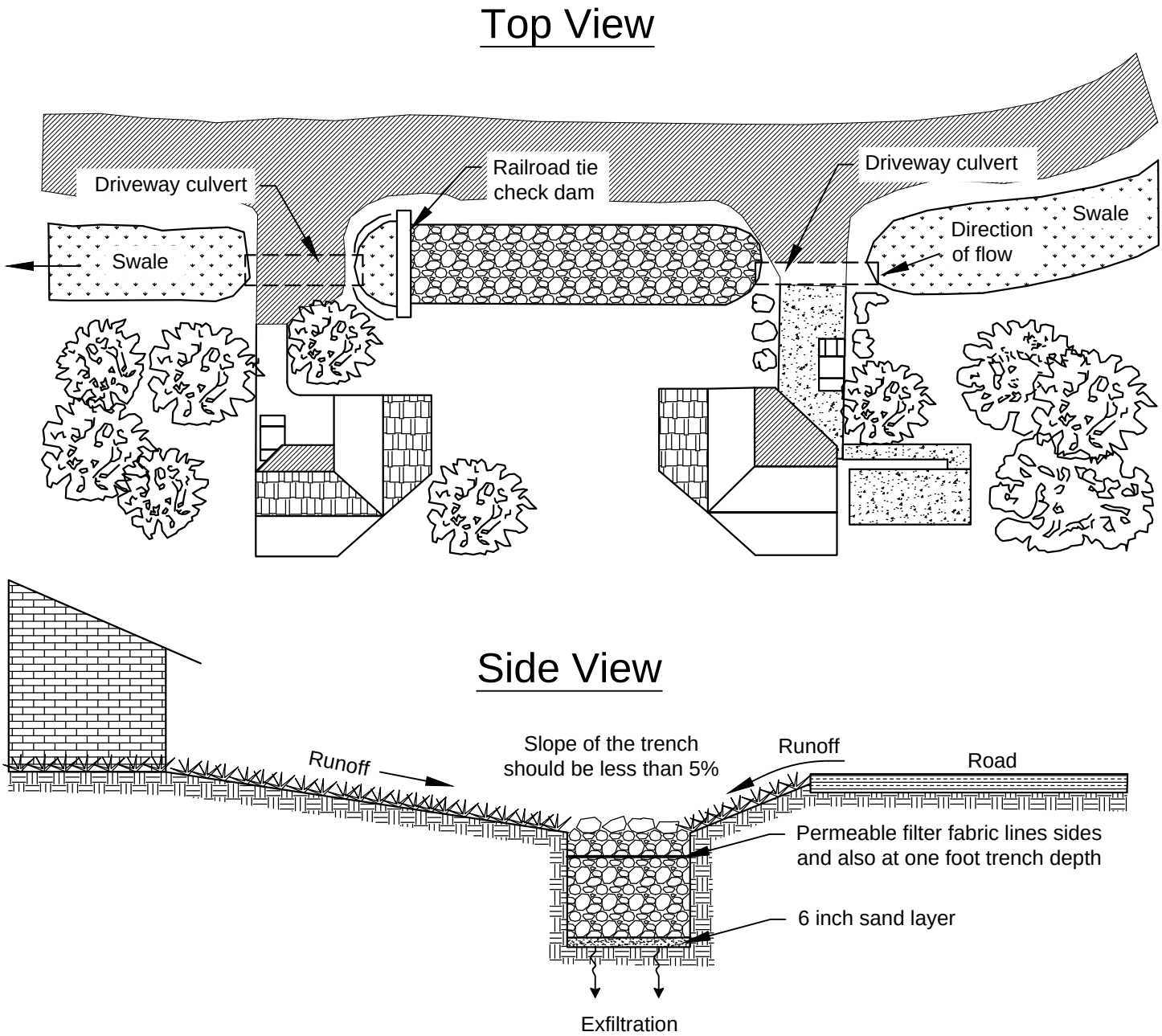

NOT TO SCALE

DEPARTMENT OF
ECOLOGY
State of Washington

BMP C200

Figure III-3.3.8
Swale/Trench Design

Revised December 2015

Please see *http://www.ecy.wa.gov/copyright.html* for copyright notice including permissions, limitation of liability, and disclaimer.

NOT TO SCALE

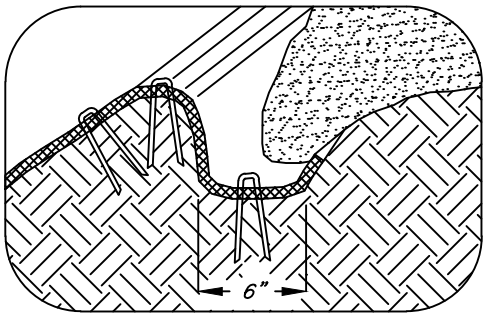

LONGITUDINAL ANCHOR TRENCH

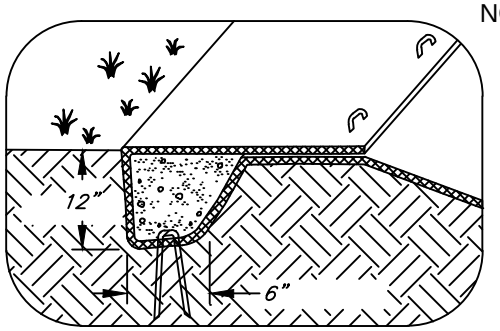

TERMINAL SLOPE AND CHANNEL ANCHOR TRENCH

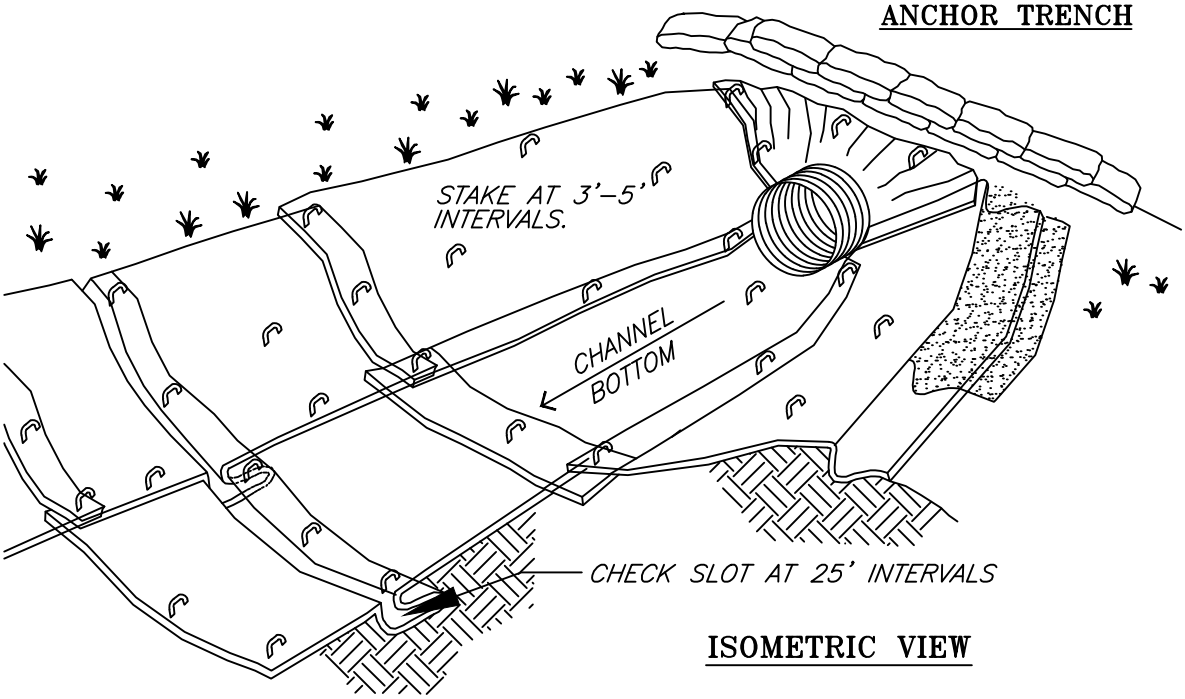

ISOMETRIC VIEW

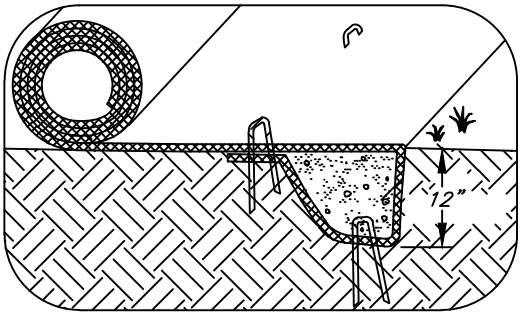

INITIAL CHANNEL ANCHOR TRENCH

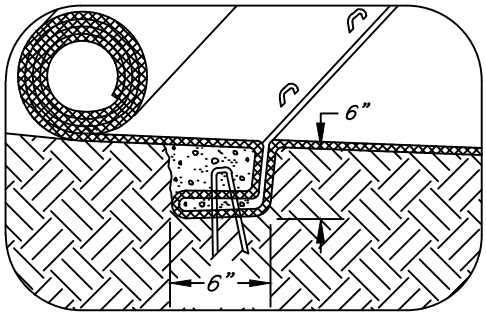

INTERMITTENT CHECK SLOT

Source: Clackamas County 2009 Erosion Prevention Planning and Design Manual

Notes:

1. Check slots to be constructed per manufacturers specifications.
2. Staking or stapling layout per manufacturers specifications.

DEPARTMENT OF ECOLOGY
State of Washington

BMP C202

Figure II-4.1.3
Channel Installation

Revised June 2015

Please see *http://www.ecy.wa.gov/copyright.html* for copyright notice including permissions, limitation of liability, and disclaimer.

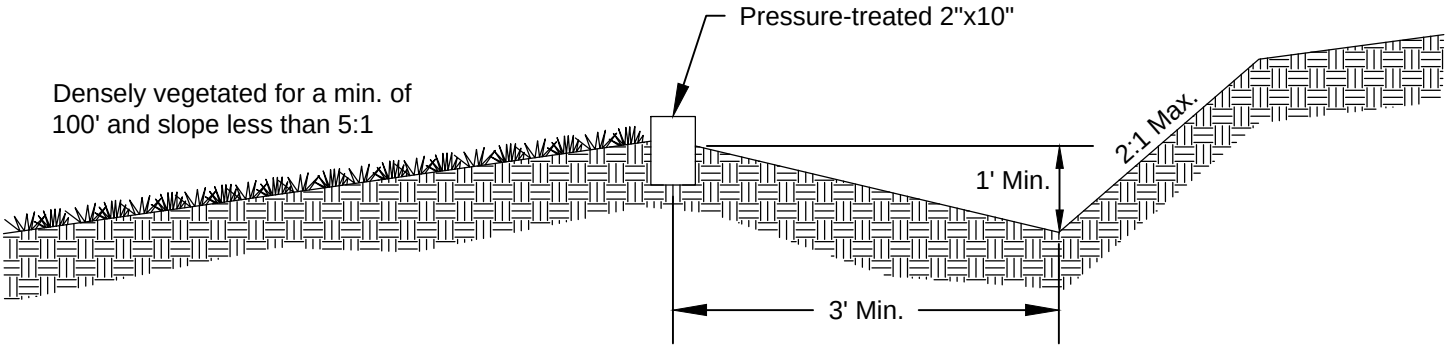

NOT TO SCALE

DEPARTMENT OF
ECOLOGY
State of Washington

BMP C206

Figure II-4.2.5
Cross Section of Level Spreader

Revised July 2015

Please see *http://www.ecy.wa.gov/copyright.html* for copyright notice including permissions, limitation of liability, and disclaimer.

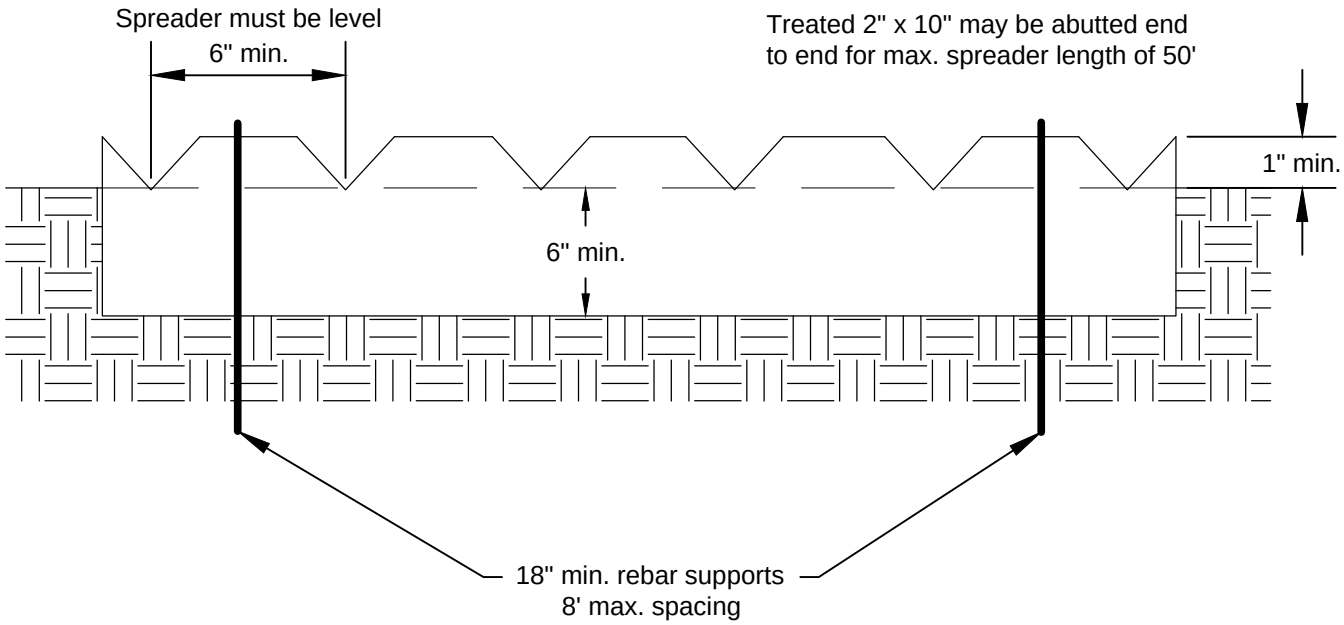

NOT TO SCALE

DEPARTMENT OF
ECOLOGY
State of Washington

BMP C206

Figure II-4.2.6
Detail of Level Spreader

Revised July 2015

Please see *http://www.ecy.wa.gov/copyright.html* for copyright notice including permissions, limitation of liability, and disclaimer.

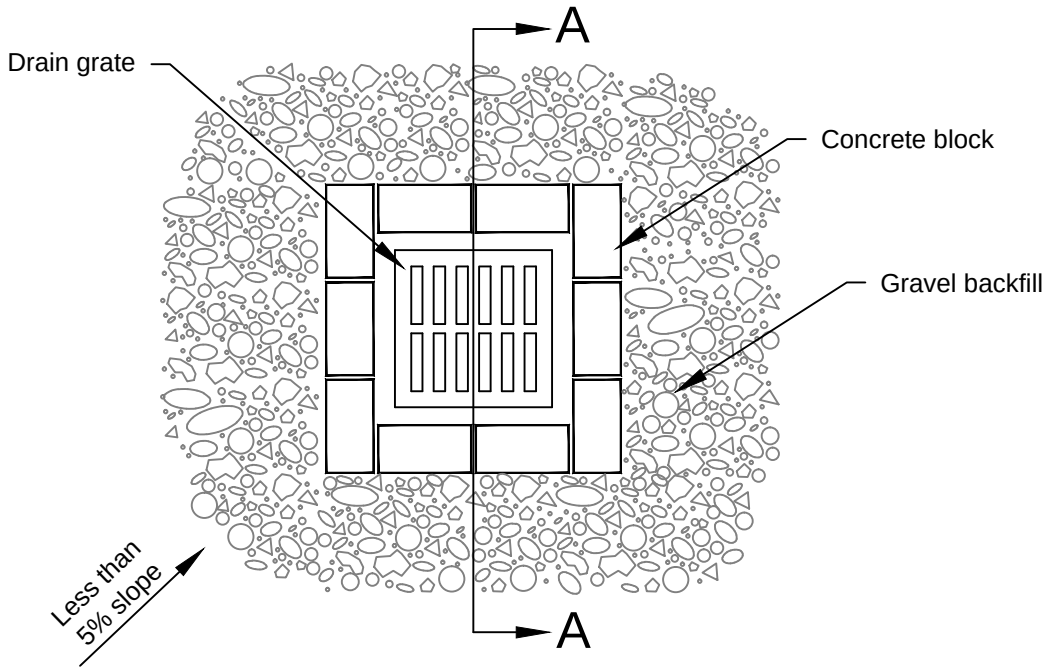

Plan View

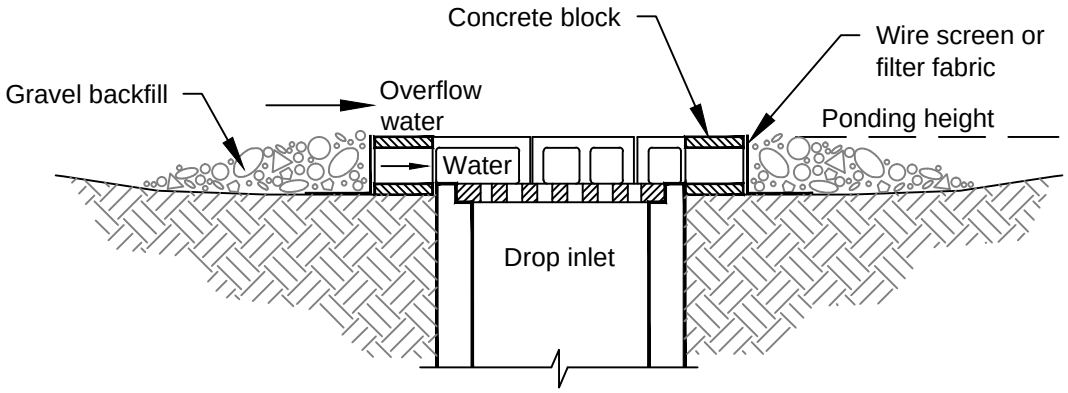

Section A-A

Notes:

1. Drop inlet sediment barriers are to be used for small, nearly level drainage areas. (less than 5%)
2. Excavate a basin of sufficient size adjacent to the drop inlet.
3. The top of the structure (ponding height) must be well below the ground elevation downslope to prevent runoff from bypassing the inlet. A temporary dike may be necessary on the downslope side of the structure.

NOT TO SCALE

DEPARTMENT OF
ECOLOGY
State of Washington

BMP C220

Figure II-4.2.8
Block and Gravel Filter

Revised August 2015

Please see *http://www.ecy.wa.gov/copyright.html* for copyright notice including permissions, limitation of liability, and disclaimer.

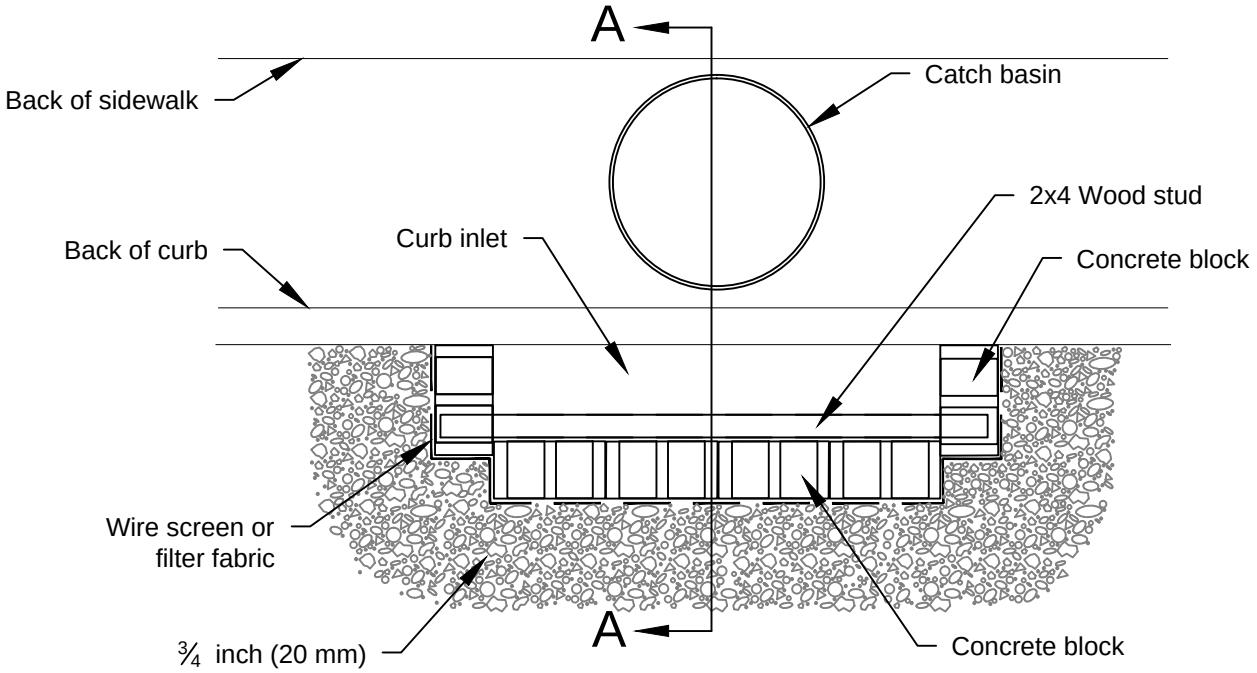

Plan View

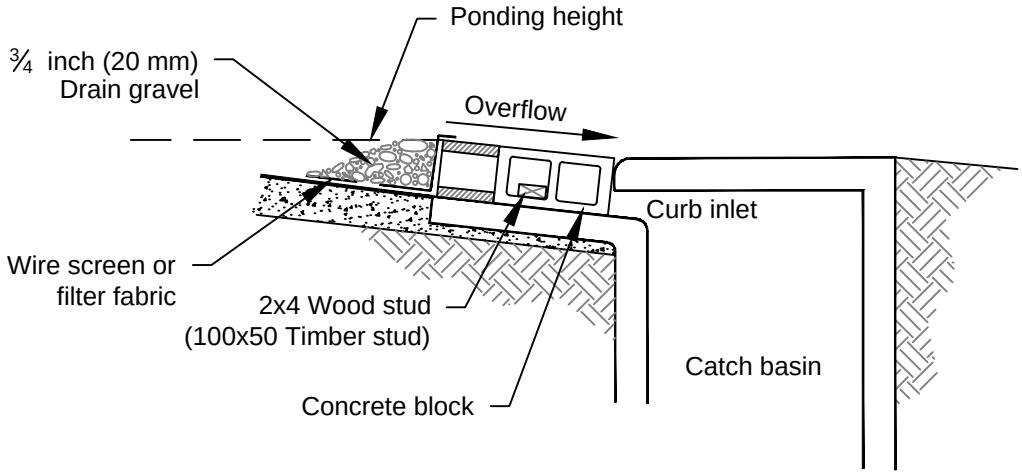

Section A-A

Notes:

1. Use block and gravel type sediment barrier when curb inlet is located in gently sloping street segment, where water can pond and allow sediment to separate from runoff.
2. Barrier shall allow for overflow from severe storm event.
3. Inspect barriers and remove sediment after each storm event. Sediment and gravel must be removed from the traveled way immediately.

NOT TO SCALE

DEPARTMENT OF
ECOLOGY
State of Washington

BMP C220

Figure II-4.2.9
Block and Gravel Curb Inlet Protection

Revised August 2015

Please see *http://www.ecy.wa.gov/copyright.html* for copyright notice including permissions, limitation of liability, and disclaimer.

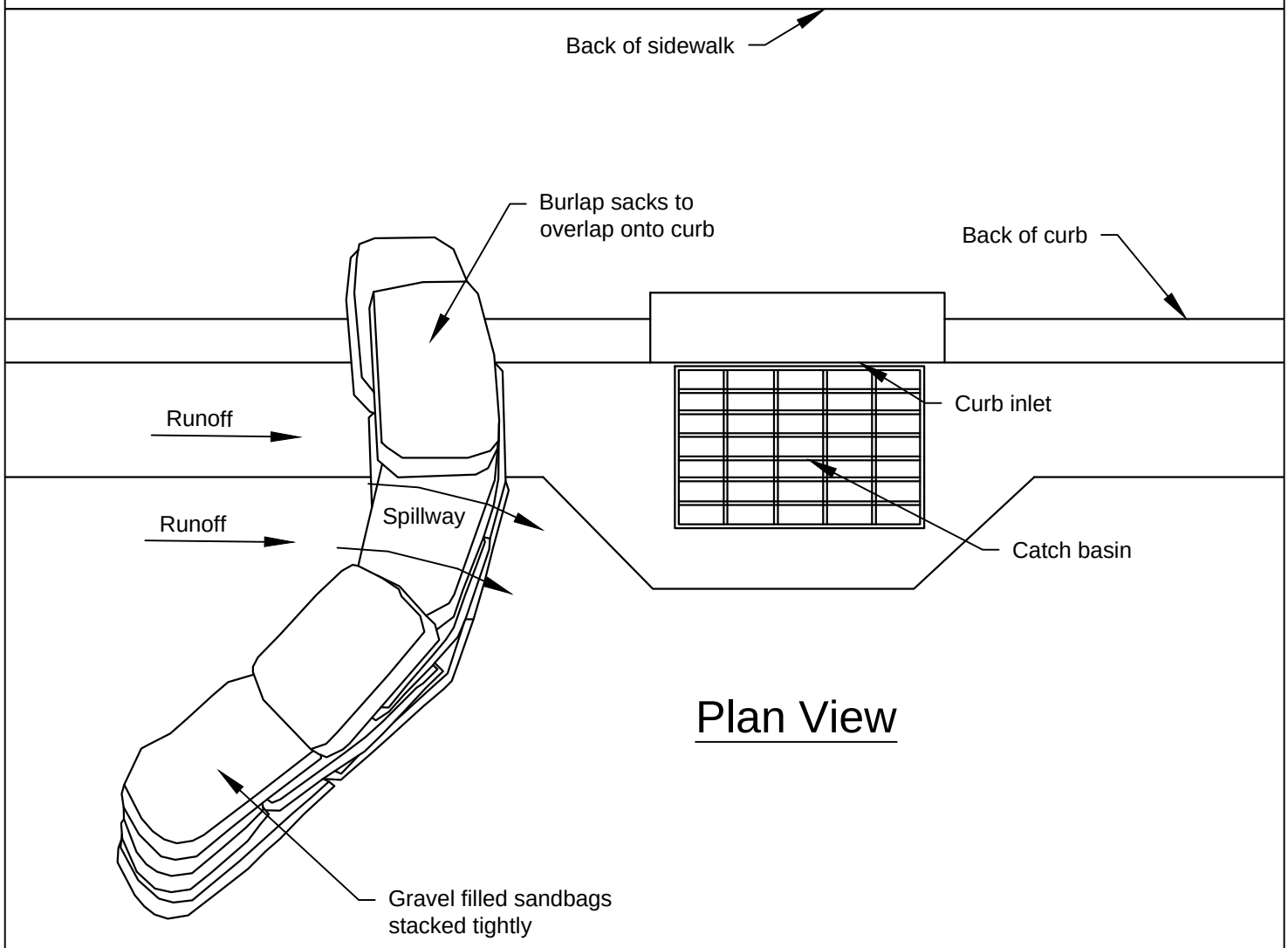

Notes:

1. Place curb type sediment barriers on gently sloping street segments, where water can pond and allow sediment to separate from runoff.
2. Sandbags of either burlap or woven 'geotextile' fabric, are filled with gravel, layered and packed tightly.
3. Leave a one sandbag gap in the top row to provide a spillway for overflow.
4. Inspect barriers and remove sediment after each storm event. Sediment and gravel must be removed from the traveled way immediately.

NOT TO SCALE

DEPARTMENT OF
ECOLOGY
State of Washington

BMP C220

Figure II-4.2.10
Curb and Gutter Barrier

Revised September 2015

Please see *http://www.ecy.wa.gov/copyright.html* for copyright notice including permissions, limitation of liability, and disclaimer.

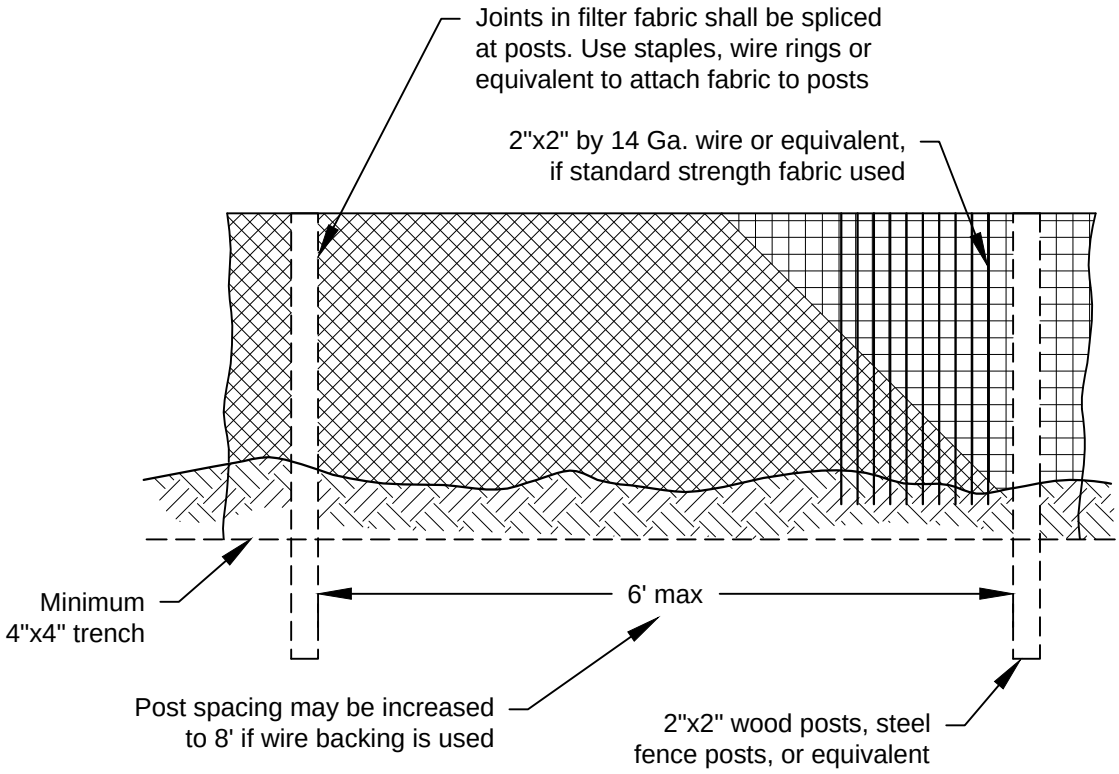

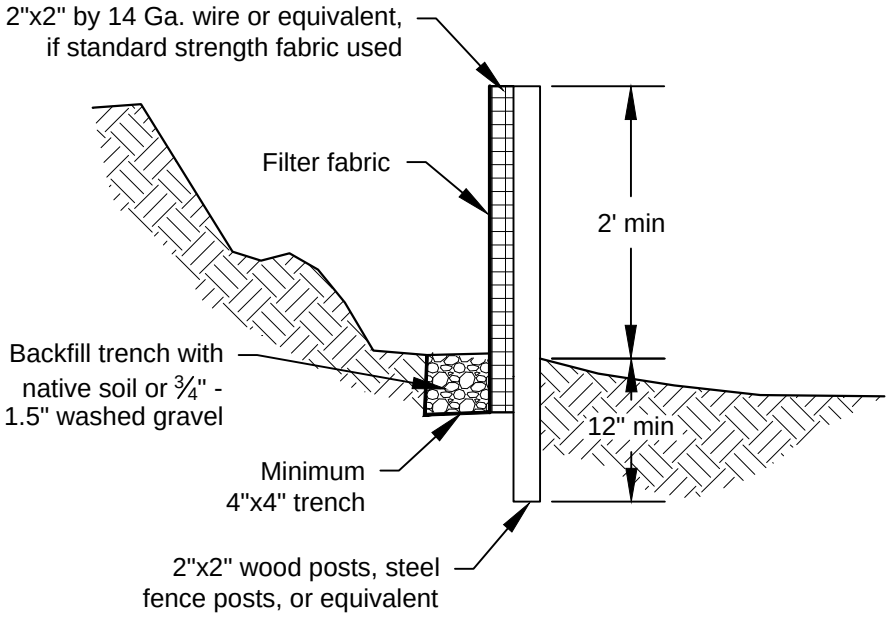

NOT TO SCALE

DEPARTMENT OF ECOLOGY
State of Washington

BMP 233

Figure II-4.2.12
Silt Fence

Revised October 2014

Please see *http://www.ecy.wa.gov/copyright.html* for copyright notice including permissions, limitation of liability, and disclaimer.

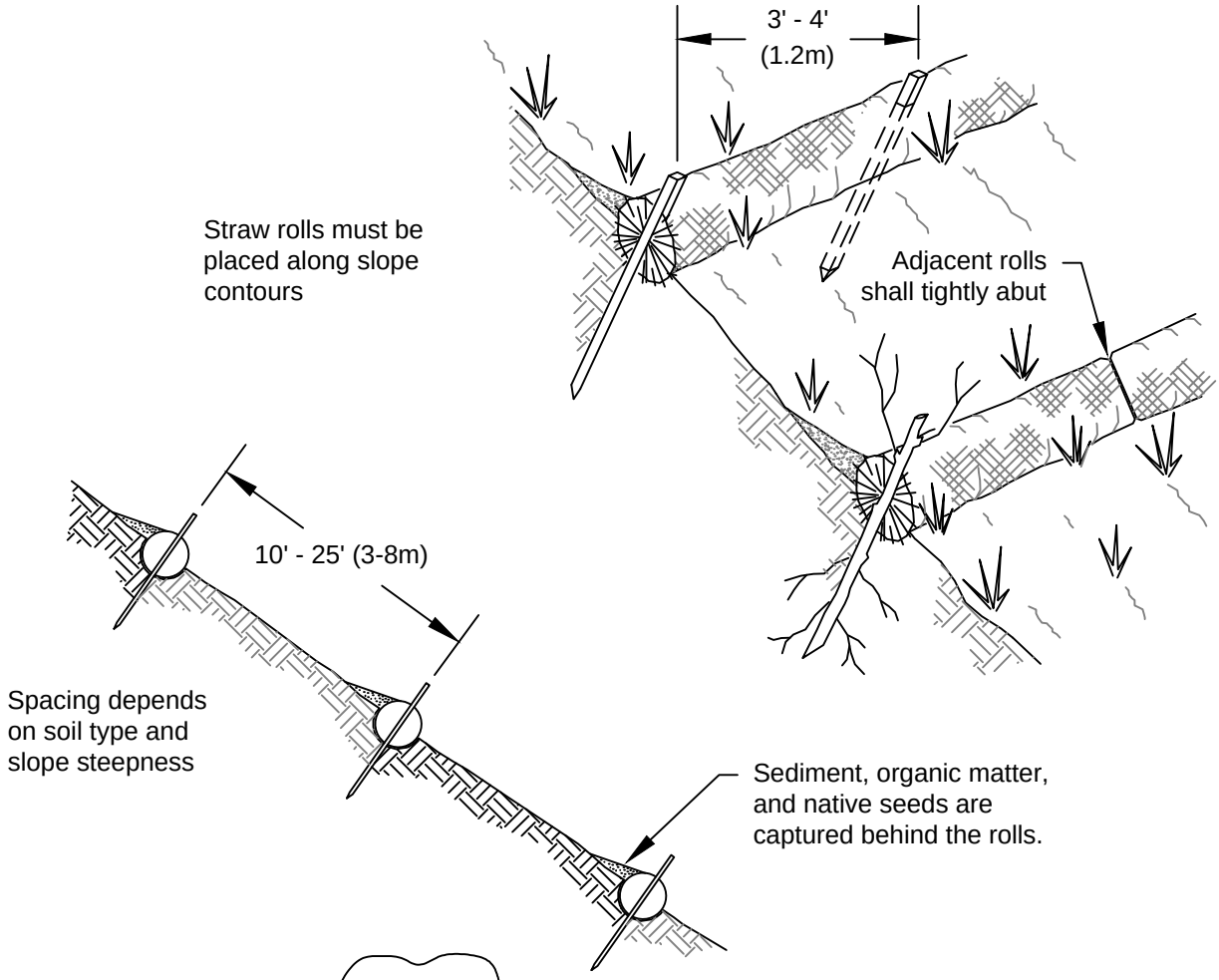

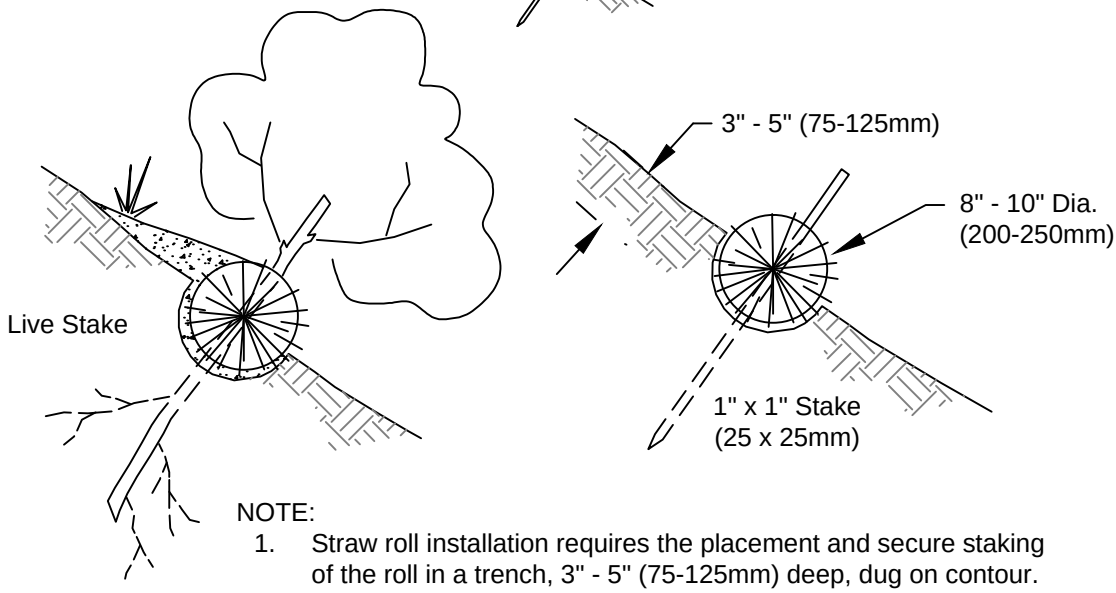

NOTE:

1. Straw roll installation requires the placement and secure staking of the roll in a trench, 3" - 5" (75-125mm) deep, dug on contour. Runoff must not be allowed to run under or around roll.

NOT TO SCALE

DEPARTMENT OF ECOLOGY
State of Washington

BMP C235

Figure II-4.2.14
Wattles

Revised November 2015

Please see *http://www.ecy.wa.gov/copyright.html* for copyright notice including permissions, limitation of liability, and disclaimer.

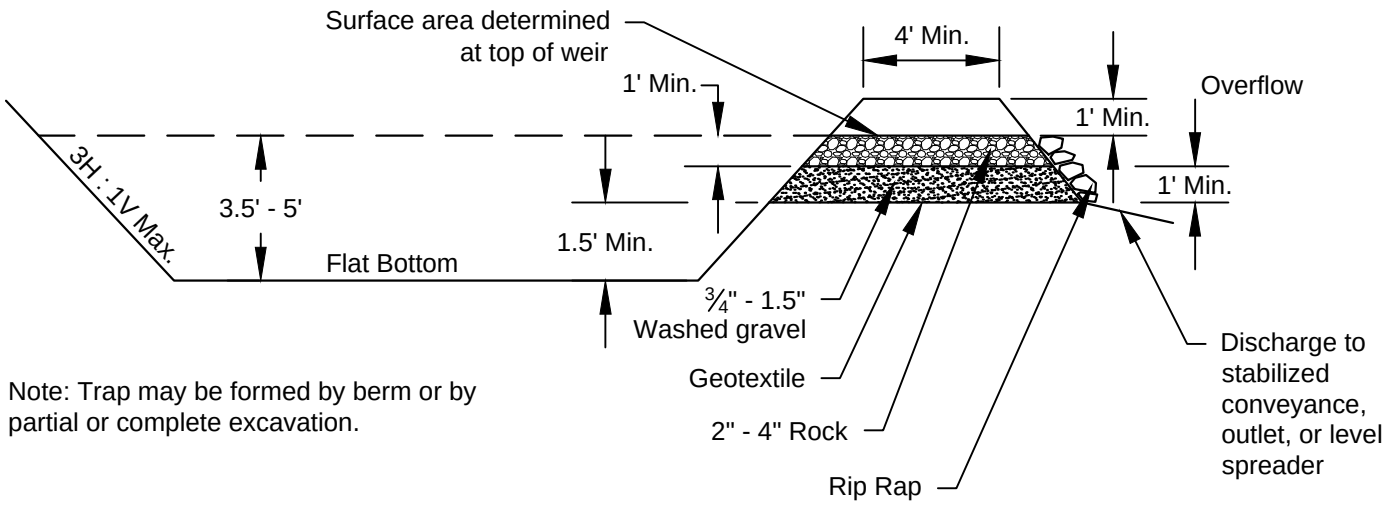

Note: Trap may be formed by berm or by partial or complete excavation.

NOT TO SCALE

DEPARTMENT OF
ECOLOGY
State of Washington

BMP C240

Figure II-4.2.16
Cross Section of Sediment Trap

Revised November 2015

Please see *http://www.ecy.wa.gov/copyright.html* for copyright notice including permissions, limitation of liability, and disclaimer.